Machine Mount with tear-off protection

786236S1SP

- √ Max. load Fz 13000 N
- √ Spring stiffness 2150 N/mm

Installation Dimensions

Frontview

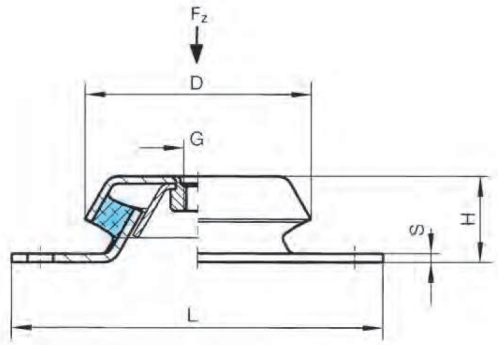

Topview

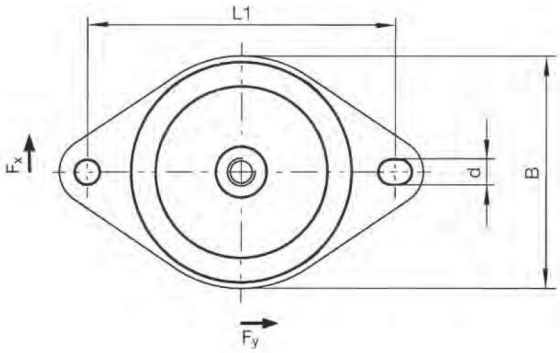

Technical Specifications

Type	Dimensions								Max. tightening torque
	D (mm)	L1 (mm)	L (mm)	H (mm)	d (mm)	s (mm)	G (mm)	B (mm)	Nm
786236S1SP	144	182	216	48	14	4	M16	144	210

Spring Stiffness (N/mm)	Max. Loads (N)
C_Z ± 20%	F_Z
2150	13000

The ratio of the vertical to horizontal rigidity is near to 1. (Cz / Cx/y ≈ 1)

Static Stiffness Curves

Force-deflection curve in Z direction

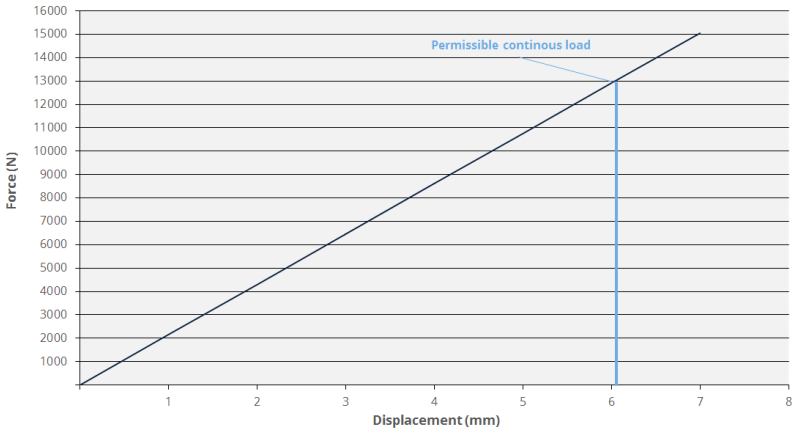

PHOENIX
PHOENIX VIBRATION CONTROLS B.V.

ORDER DIRECTLY? MORE INFORMATION ON THIS PRODUCT OR INTERESTED IN OUR EFFICIENT CUSTOM MADE SOLUTIONS?

CALL +31(0)187 493744 OR SEND AN E-MAIL TO INFO@PHOENIXVC.NL