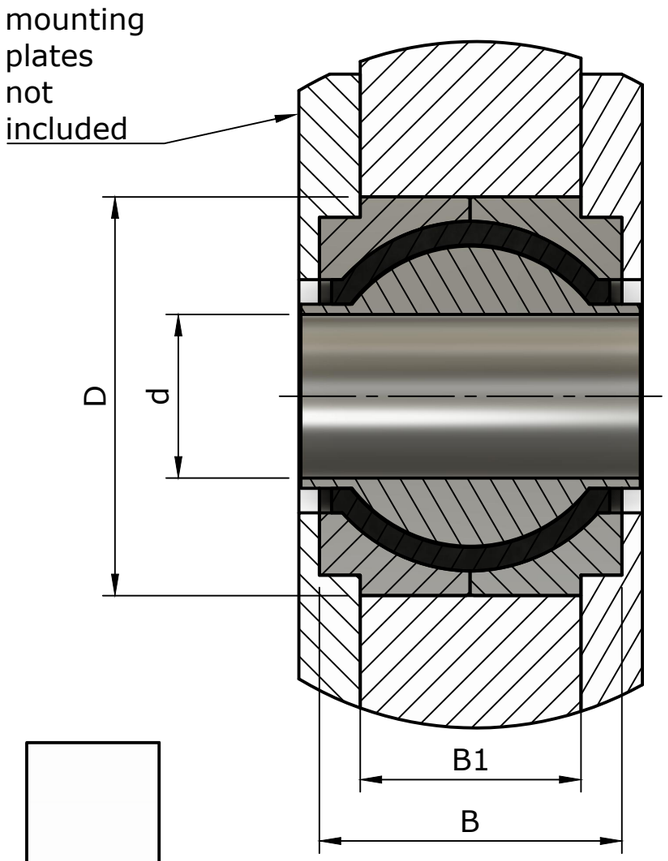

Built-in situation

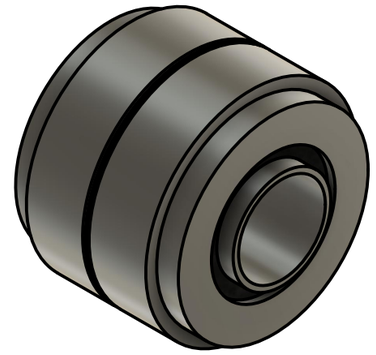

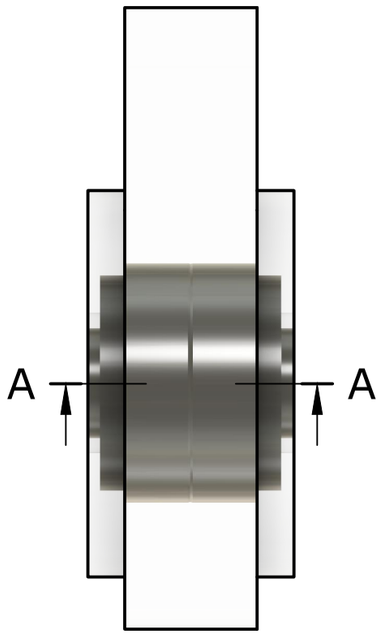

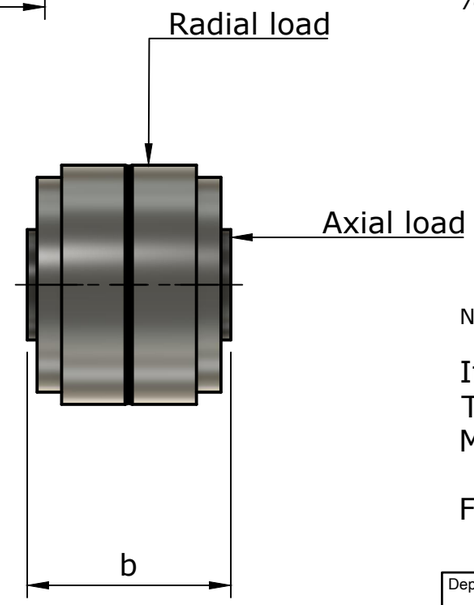

Item number	D	d	B	B1*	b	Fmax rad	Fmax ax	°Max rad	°Max car
745022	89	30	70	55,6	76	55,5	18	8	8
745025	80	35	50		60	35	8	8	8
745026	95	48	50		55	30	6,6	8	8
745032	118	52	92	72	106	100	18,5	8	8
745035	66	25	44		69	18	3,9	8	8
745038	168	100	87	59	90	150	40	6	6
745082	195	80	146	106	166	460	157,2	3	3
745100	168	70	122	92	140	405	136	3	3

D	: Outer diameter	[mm]
d	: Inner diameter	[mm]
B	:Width outer scale	[mm]
B1*	: Width outer scale	[mm]
b	: Width inner part	[mm]
Fmax rad	:Maximum radial load	[kN]
Fmax ax	:Maximum axial load	[kN]
°Max rad	:Maximum deflection angle radial	[deg]
°Max car	:Maximum deflection angle cardanic	[deg]

Note : B1 on special request only

Item number: 745022 - 745100
Type: Phoenix Spherical bearing
Material: NR / S355

For more information: info@phoenixvc.nl or www.phoenixvc.nl

Tolerance unless otherwise specified:
ISO 3302-1 M3
DIN ISO 2768 MK
DIN 53505

Dept.	Technical reference	Created by	Approved by
		HG 01-01-2018	GJ 01-01-2018
		Document type: Inspection drawing	Document status: In Production
		Title: PHOENIX Spherical Bearing 745022-745100	DWG No.: GJ01012018
			Rev.: - / Date of issue: 01-01-2018 / Sheet: 1/1

PHOENIX VIBRATION CONTROLS B.V.